VOLVO C30

VOLVO
C30

THE VOLVO C30 HAS AS MANY LOOKS AS YOU DO. THAT'S WHY THERE ARE MORE PERSONALIZATION OPPORTUNITIES THAN EVER BEFORE, WHY THIS FOUR-SEATER IS A WORLD LEADER, AND WHY YOUR INDIVIDUALITY COULDN'T BE IN A SAFER PLACE. **THAT'S WHY YOU DRIVE ONE.**

IT'S DIFFERENT.
BUT THAT'S NOT THE ONLY BENEFIT.

Nature makes sure we all start out unique. And the Volvo C30 can help you stay that way. First-class comfort, world-class safety and elegant Scandinavian design are all part of the special Volvo DNA and instantly apparent here. At first glance you'll notice unique Volvo design details such as the big, bold iron mark on a large, trapezoidal grille, aggressive headlamps that sweep back gracefully, yet peer out protectively, and demonstrative rear lamps that include state-of-the-art Emergency Brake Lights that warn cars behind when you brake harder than normal. Add to that exceptional road holding and scores of exterior and interior customisation possibilities – including the sporty R-DESIGN trim – and you'll discover that the Volvo C30 is highly qualified to protect you and yours – especially from boredom.

VOLVO
C30

180° FROM A CUP OF COCOA AND A BOOK.

Fun does not stay home at night. It is not a limited resource. And there is no embargo against it. Practically speaking then, fun is the way to go. And that's good news for us because with wheels at the corners, a frame of high torsional-rigidity and a suspension that deftly masters quick corners as well as long commutes, the Volvo C30 swiftly liberates fun from the confines of the ordinary and fundamental – and keeps it going, day in, day out, all year round. What's more, insist on the sports chassis and the inherent agility of this car becomes even more assertive.

LOWER CHASSIS. RAISE PULSE.

The excellent handling characteristics of this car are made even more responsive when you choose the R-DESIGN. Its stiffer springs, stiffer bushings and sport-tuned roll bars make it easy to establish a fondness for the roads you travel. Along the way, you may discover a few favorite turns that always seem happy to see you, too. By all means, Shift down another gear and say hello.

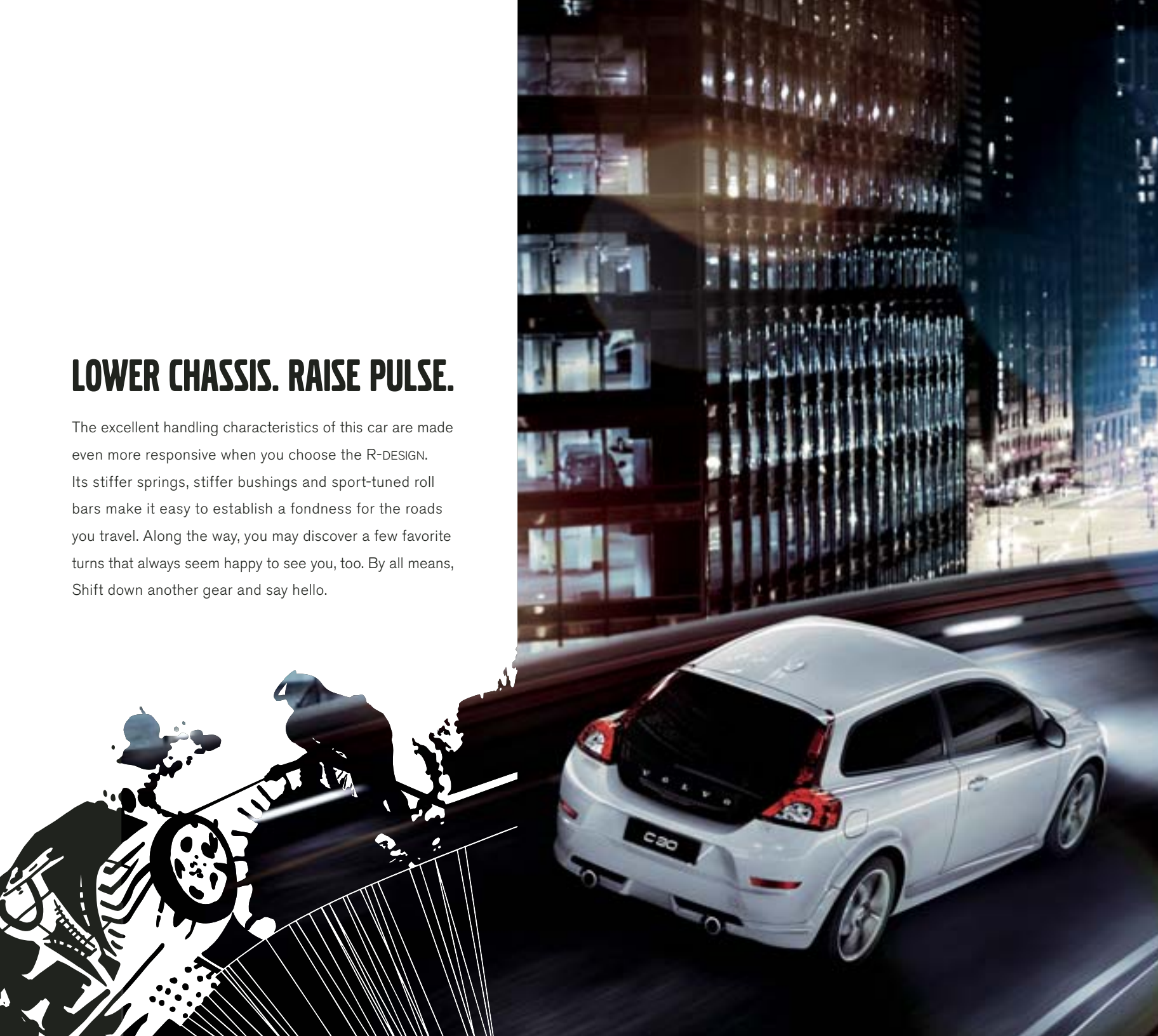

DREAM, YES. SLEEP, NO.
Dream now about your new Volvo C30. Once you get behind the wheel there will be no time for naps. The engine is built to power your vision a long way past the ordinary. What's more, every Volvo engine is engineered to respond instantly so spontaneous adventures never have to wait. Better get some rest now.

BUCKLE UP.

Settle in to one of the world's most comfortable driver's seats and you'll find everything you need close at hand. The unique floating center console presents intuitive controls for the infotainment and climate systems and is available in a variety of finishes, including Volvo's real wood and real aluminum inlays. The overall effect is stimulating, yet the modern Scandinavian design also invites you to relax – while wearing the stylish 3-point safety belt that Volvo invented for you, of course.

SIDEWALK
CLOSED

IMPROVISE.

Modern physics suggests a certain amount of fundamental randomness in the universe, which makes the versatile Volvo C30 perfect for impromptu shopping. Like every Volvo, this car is built to provide an intelligent mix of performance and practicality. For example, the seating and storage configurations are flexible enough to provide excellent loading capacity as well as a flat cargo floor. Of course, roof-mounted carrying accessories are also available.

C30

VOLVO
C30

FACETS MAKE THE JEWEL.

How will your Volvo C30 catch the light? As you imagine all the possible exterior variations and narrow your choices to your select favorites, you can begin to realise your ideal car. Styling kit? R-DESIGN trim? 18" wheels? Roof spoiler? Sunroof? Chrome tailpipes? Active Dual Xenon headlights? If you want to see these combinations in real time before you finally decide, you can build your own virtual versions at **www.volvocars.us**

FUN KNOWS WHERE MORE FUN IS.

In a car that's fun to drive, being stuck in traffic is hardly ideal. Of course, the audio system in the floating center console can provide plenty of amusement at any speed, but it's the Real Time Traffic (RTT)* system that can really help keep the fun rolling. In addition to its helpful GPS navigation functionality, the RTT system can help you avoid traffic delays. Detailed maps are stored on a hard disk, easily updated by DVD and easy to search for data, information, knowledge, understanding, wisdom – or just directions to a party.

* Included in the Platinum trim level

BE QUIET, TOMORROW.

Music is life. And Volvo's modern sound systems are among the best in class – especially with the latest generation of Dolby® Pro Logic® II Surround and extremely efficient digital Class D amplification*. The Dolby® Pro Logic® II Surround utilizes a center loudspeaker and sophisticated sound processing calibrated especially for the interior of the Volvo C30. This system ensures that every passenger enjoys a well-balanced stereo presence regardless of seating position – a remarkable achievement considering that nobody sits in the middle of the car. Using Bluetooth® with streaming audio, connect your iPod® or USB player and your playlists are easy to select and your music is ready to travel, non-stop.

* Included in the Platinum trim level

VOLVO
C30
T5
C30

AVOID ACCIDENTS EVEN WHEN PARKED.

Volvo safety doesn't stop when you park your car. With Approach Lighting, your car can be illuminated, inside and out, using your remote control as you approach your car, and with Home Safe Lighting, you can also activate a dipped beam with the headlight stalk as you leave your car. This feature can be especially convenient when your personal celebrity spotlight operator has the night off. And with the optional keyless drive, the doors will unlock as you grasp the handle – like magic – and you can start the car without inserting the key (as long as you have the key in your pocket or purse).

INNOVATED FOR YOUR ENJOYMENT, THE VOLVO SAFETY TECHNOLOGIES WILL PROTECT MORE THAN THE FUN OF DRIVING.

Across the world, Volvo equals safety. And that comes with good reason, because few carmakers can match our record of safety innovations and the commitment for safety that has guided us for more than 80 years. Of course, this makes us extremely proud. But we're not satisfied. Because we know what we want to achieve: zero accidents. This huge task calls for innovative thinking and a brand new approach to the way we design cars. Good news is we've already come a long way. For starters, our cars are more fun and engaging to drive than ever (because a bored driver will never be a safe driver). Neither is the technology needed any figment of the imagination – some are already available. This means driving a Volvo today is like having a first peek at a very exciting automotive future – a future where passionate engineering and design do more to help you get the most out of life.

After all, there's more to life than a Volvo.

PERSONAL GATEKEEPING.

Inspired by fighter aircraft technology, the Intelligent Driver Information System (IDIS) can help reduce your workload in stressful situations.

RAIN SUPPORT.

For more comfort in wet conditions, the rain sensor included in the optional Climate Package automatically engages the wipers if it begins to rain or if water splashes onto your windscreen.

AN EYE ON THE BLIND SPOT.

The optional Blind Spot Information System (BLIS) helps you detect vehicles entering your blind spot.

STAY ON TRACK.

Volvo's standard Dynamic Stability and Traction Control (DSTC) anti-skid system improves handling and safety in a wide range of challenging situations.

ON-ROAD ENLIGHTENMENT.

The optional Active Dual Xenon headlights expand your vision range when driving in the dark and provides considerably improved illumination around bends.

EXHILARATING COMFORT.

Ergonomic design in seats and the driver's environment makes you relaxed and helps you maintain your concentration on driving.

DESIGNED TO CATCH THE LIGHT BRILLIANTLY, THIS CAR ALSO REFLECTS A PROMISE.

Thankfully, the automotive industry is moving away from fantasyland to the real world. Our journey towards a better environment started already in the early 70's. Then we were among the first carmakers to acknowledge the environmental downside of cars and to do something about it. Since then we are constantly innovating to reduce the environmental impact of the cars and how we make them.

In the near future we will introduce new technology such as plug-in hybrid vehicles that will further reduce CO_2 emissions and can be charged from a standard wall socket. And we're heavily engaged in the development of electrical vehicles – a technology that will dramatically reduce the environmental footprint of our cars and make them even more fun to drive.

Good for you, and for the world we share.

CLEANER EXHAUST.

Fast responding after a cold start, Volvo's advanced emission control eliminates between 95 and 99% of carbon monoxide, hydrocarbons and nitrogen oxides from engine exhaust gases.

HEALTHIER INTERIOR MATERIALS.

All our upholstery and interior textiles are tested for specific allergy-inducing or harmful substances. And several interior metal parts are tested with regard to contact allergies. Good for you, and for anyone who shares your ride.

FRESH CABIN AIR.

Continuously monitoring the incoming air and shutting out carbon monoxide, ground-level ozone and nitrogen dioxide, Volvo's Interior Air Quality System, included in the optional Climate Package, helps ensure that the air you breathe in the car is cleaner than the air outside when driving in heavy city traffic.

85% RECYCLABLE.

To help minimize its total environmental impact, every Volvo is designed to facilitate recovery and recycling at the end of its useful life.

FUEL-SAVING DESIGN.

To reduce energy loss from air and roll resistance, we utilize advanced aerodynamic design, lightweight materials and low-friction technology. Together with state-of-the-art engine technology, this lowers your CO_2 emissions and helps you travel further on less fuel.

LIGHTS FOR LOWER EMISSIONS.

The optional LED daytime running lights integrated in the front spoiler not only add to the looks of your Volvo – reducing energy consumption, these efficient design details also contribute to lower CO_2 emissions.

C30 T5

For a truly contemporary look go for the new Orange Flame metallic finish on your C30. Shown here with the standard 17" Spartacus alloy wheels with a double spoke design. The interior shows the new light colored Blond leather interior for an airy scandinavian look.

ACCESSORY STYLING OFFERS*

Set your new Volvo C30 apart from the pack with these exterior and interior styling offers. Exterior design accents emphasize a more aggressive demeanour with the following accessories: Front bumper bar, rear skid plate, side scuff plates, fog light frames, 17" Freja alloy wheels and larger polished tail pipes. The interior design accents include Sport floor mats and a reversible cargo mat featuring the C30 logo along with a sleek Sport door sill moulding.

* Retailer Installed Accessory

R-DESIGN

PROUD SPONSOR OF THE UNFAIR ADVANTAGE.

Choose the Volvo C30 R-DESIGN variant and the C30 receives a first-class attitude adjustment – inside and out. Boldly provocative yet tastefully reserved, the exclusive R-DESIGN styling elements express a definitive passion for sport. From the R-DESIGN grille badge to the dual tailpipes the Volvo C30 R-DESIGN exudes confidence at every turn.

R-DESIGN upholstery
Settle back in unique Flex-Tec and leather upholstered seats with embossed R-DESIGN logo. Choose Offblack/Offblack or Offblack/Calcite.

R-DESIGN deco inlay
The center stack and door handle inlays convey a sporty, contemporary feel.

Sports gearshift knob
Leather and aluminum are combined to give the gearshift knob an exciting look and feel.

Sports steering wheel
Every R-DESIGN model features an exclusive sports steering wheel with embossed logo.

Instruments
At the center of the instrument panel, the speedometer and rev counter feature attractive blue inserts.

Sports pedals
Enhance the driving experience with these tough, ridged sports pedals.

Silk metal grille
Silk metal finished front grille and side mirror caps add a dash of exterior sportiness.

Sports floor mats
Look down and you'll see exclusive sports floor mats that are brought to life with contrasting piping.

CHOOSE YOUR VOLVO C30.

As you define your own style and specify your needs, there's a range of equipment levels, factory installed options and accessories that can help reflect your taste or simplify your tasks. Find your personal Volvo at **www.volvocars.us**

C30 TRIM LEVEL:

PREMIER PLUS

Power Glass Moonroof
Power Driver Seat with Memory including Rearview Mirrors
Power Passenger Seat
LED Daytime Running Lights (DRL)
Aluminum inlays (standard R-DESIGN)
Loadcover, soft (R-DESIGN only)

PLATINUM

Navigation System with Map Care
Volvo Premium Sound System
SiriusXM™ Satellite Radio with 6-Month Subscription
Power Glass Moonroof
Power Driver Seat with Memory including Rearview Mirrors
Power Passenger Seat
LED Daytime Running Lights (DRL)
Aluminum inlays (standard R-DESIGN)
Loadcover, soft (R-DESIGN only)

OPTIONAL PACKAGE:

CLIMATE PACKAGE

Heated front seats
Electronic Climate Control (ECC)
Interior Air Quality System (IAQS)
High pressure headlight washer
Rainsensor

STANDARD FEATURES

VALUE	C30 T5	C30 T5 R-DESIGN
Complimentary Factory Scheduled Maintenance for 3 years, 36,000 miles	●	●
SAFETY		
ABS – Anti-lock Brake System	●	●
Approach Light	●	●
Dynamic Stability Traction Control (DSTC)	●	●
Home safe lightning	●	●
Isofix–rear seat	●	●
Passenger airbag	●	●
Seat belt pretensions, all seating positions	●	●
SIPS Curtain	●	●
SIPS bag	●	●
Whiplash protection, front seats	●	●
Multi-stage airbag, drivers/passenger side with kneepad	●	●
INTERIOR		
Audio 'High Performance' 4x40 watts, 8 speakers, in-dash CD, MP3	●	●
Audio control buttons in steering wheel	●	●
Bauxite decor inlays	●	N/A
Bluetooth® with streaming audio	●	●
Cruise control	●	●
Foldable rear seat, 2 split	●	●
Leather gear knob with aluminum inlay	●	N/A
Leather steering wheel	●	N/A
Leksand T-Tec upholstery	●	N/A
Leksand T-Tec/leather upholstery	N/A	●
Pollen filter	●	●
Power windows	●	●
R-DESIGN aluminum inlay	N/A	●
R-DESIGN aluminum sport pedals	N/A	●
R-DESIGN blue-face instruments	N/A	●
R-DESIGN leather gear knob with aluminum inlay	N/A	●
R-DESIGN leather sport steering wheel with aluminum inlay	N/A	●
Temperature gauge, outer	●	●
Trip computer	●	●

	C30 T5	C30 T5 R-DESIGN
USB and AUX input	●	●
Vanity mirrors in both sun visors	●	●
EXTERIOR		
Halogen lights	●	●
Key-blade Integrated remote control, central locking	●	●
Polished Exhaust Pipe	●	N/A
Sport Chassis	N/A	●
R-DESIGN exterior mirrors in matt silver	N/A	●
R-DESIGN front grill	N/A	●
R-DESIGN polished exhaust pipes	N/A	●
Roof Spoiler (Color Keyed)	N/A	●
Sport Body Kit	N/A	●
17" Spartacus alloy wheels	●	N/A
18" Midir alloy wheels	N/A	●

® The Bluetooth word mark and logos are owned by the Bluetooth SIG, Inc. and any use of such marks by Volvo Car Corporation is under license. Other trademarks and trade names are those of their respective owners.

SiriusXM SATELLITE RADIO

HD Radio

INDIVIDUAL OPTIONS

	C30 T5	C30 T5 R-DESIGN
Blind Spot Information System (BLIS) with Power folding side mirrors	○	○
Dual Xenon Gas Discharge Headlights with Active Bending Lights (ABL)	○	○
Geartronic Automatic Transmission	○	○
Keyless drive	○	○
Leather seating surfaces	○	N/A
Load cover soft	○	○
Metallic paint	○	○
Sirius Satellite radio includes 6 month subscription	○	○

● = Standard ○ = Option P = Package N/A = Not available

COLOR YOUR VOLVO.

When it comes to the appearance of your Volvo, the choices of exterior color, wheels and other styling items are probably your most important design decisions. For more exterior styling options and to build your new Volvo online, please visit **www.volvocars.us**

614 Ice White
T5 and R-DESIGN

481 Cosmic White metallic
R-DESIGN

701 Orange Flame Metallic
T5 and R-DESIGN

612 Passion Red
R-DESIGN

490 Chameleon Blue metallic
T5

498 Caspian Blue Metallic
T5

426 Silver metallic
T5

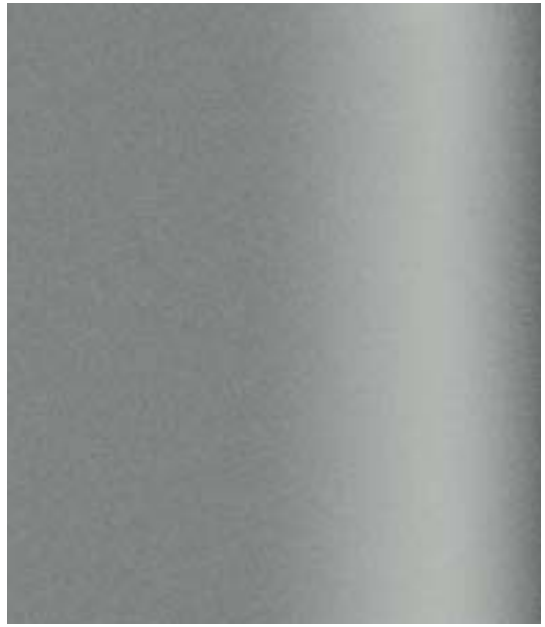

477 Electric Silver metallic
R-DESIGN

455 Titanium Grey metallic
R-DESIGN

452 Black Sapphire metallic
R-DESIGN

019 Black Stone
T5

Clean colors
To reduce usage of environmentally hazardous solvents all Volvo exterior colors are water-based. What's more, our painting facilities are among the cleanest in the world.

Please note: It is not possible to reproduce exact original shades in printed matter. Please ask your retailer to show you samples.

* Metallic paint is an option.

VOLVO
C30

EXTERIOR DESIGN

EXTERIOR DESIGN Aluminum wheels

Midir 7.5x18"
Diamond Cut
R-DESIGN

Spartacus 7x17"
Silver Bright
T5

ACCESSORY Aluminum wheels

Atreus 7.5x18"
Diamond Cut/Dark Grey

Medea 7.5x18"
Split, Silver Bright

Medusa 7.5x18"
Silver Bright

Freja 7x17"
Diamond Cut/Light Grey

Freja 7x17"
Diamond Cut/Dark Grey Matt

Styx 7x17"
White

PREMIUM
SOUND

INTERIOR DESIGN

Leather-clad R-DESIGN sports steering wheel with aluminum inlay

Leather-clad steering wheel

Leather-clad gear knob with aluminum inlay, manual

Leather-clad gear knob with aluminum inlay, Geartronic

R-DESIGN center stack and door panel inlays

Bauxite center stack and door panel inlays (standard on T5)

Aluminum center stack and door panel inlays (available in the Premier Plus trim level))

R-DESIGN sports pedals in brushed aluminum (available for manual and Geartronic)

Leather Offblack, 5DSH
Aluminum center stack and door panel inserts
Offblack carpeting and floor mats

Leksand Textile upholstery with T-Tec Offblack, 5HSH
Aluminum center stack and door panel inserts
Offblack carpeting and floor mats

Leather Blond, 5DSP
Aluminum center stack and door panel inserts
Offblack carpeting and floor mats

Leksand Textile upholstery with T-Tec Offblack/Blond, 5HSN
Aluminum center stack and door panel inserts
Offblack carpeting and floor mats

R-DESIGN Leather/Flex-Tec Offblack, 5FS7
R-DESIGN center stack and door panel inserts
Offblack carpeting and R-DESIGN floor mats

R-DESIGN Leather/Flex-Tec Offblack/Calcite, 5FSK
R-DESIGN center stack and door panel inserts
Offblack carpeting and R-DESIGN floor mats

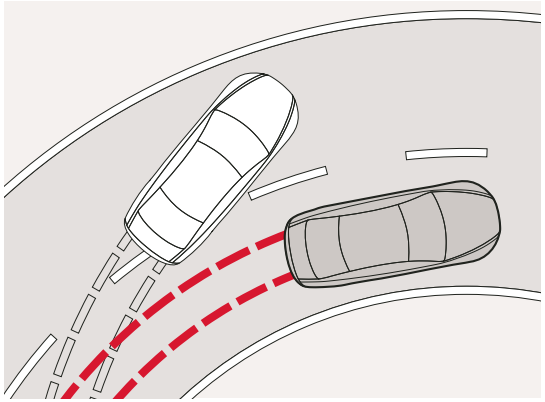

Dynamic Stability and Traction Control (DSTC)

Adaptive brake light

Active Dual Xenon Headlights

Volvo's interactive safety technologies

SAFETY

SAFETY Preventive

Dynamic Stability and Traction Control (DSTC)
By helping prevent fishtails, spinouts, and rollovers, stability control technology like DSTC has been described as one of the most vital safety advances of the past decade. DSTC is able to detect a potential skid and help counteract this one by reducing the engine's power output, or braking on one or more wheels.

Adaptive brake light
Active at speeds above 30 mph, the adaptive brake light can sense the difference between normal and panic braking. If it is a panic situation, all the brake lights will flash at a rate of four times per second. Once your speed slows to below 19 mph, the lights stop flashing and hazard lights flash instead. Using LED technology that needs less time to light up than regular bulbs, traffic behind you can react sooner.

Intelligent Driver Information System (IDIS)
To help avoid distractions during critical driving situations, IDIS constantly analyzes your driving and will delay secondary information from the car or one of its onboard systems when it detects intense steering, braking or acceleration. As soon as things calm down, the phone call or the delayed information is presented.

Active Dual Xenon Headlights*
In addition to improving illumination using Dual Xenon light technology, the active lights give a boost to your vision round bends at night. Controlled by microprocessors, the motorized lamps turn up to 15 degrees in either direction when driving – reliably lighting up your chosen path. A twilight sensor disengages the adaptive function during daylight to extend its life span.

*Optional

SAFETY Protective

Volvo's interactive safety technologies
In a Volvo, safety is about interaction. Because it's not the number of safety features that determines how safe a car is, it's how well they seamlessly interact to help protect the occupants in the event of a collision.

IN A REAR IMPACT the rear deformation zones will help absorb crash energy. The fuel tank is designed to remain well protected in front of the rear axle. The head restraints help protect the neck and spine, and Volvo's unique Whiplash Protection System (WHIPS) cradles the front seat occupants in a controlled manner to help prevent whiplash injuries.

IN A SIDE IMPACT Volvo's unique Side Impact Protection System (SIPS) helps distribute the crash forces across the car's body, away from the occupants. The side airbags in the front seats help protect the chest and hip, while the Inflatable Curtain (IC) adds head protection.

IN A ROLL-OVER the robust safety cage and the reinforced roof structure together with the safety belts and belt pre-tensioners will help protect the occupants. If the car first has been hit from the side, the Inflatable Curtain (IC) deploys to help provide head protection.

IN A FRONTAL COLLISION the patented frontal structure will yield to help absorb and disperse crash energy. The compact power train is designed to help optimise deformation. Inside the car, safety belts interact with the collapsible steering column and dual-stage airbags to help keep the occupants out of harm's way.

Energy-absorbing frontal structure
Volvo's patented frontal structure is built with several types of steel to allow optimal deformation – outer layers are more yielding, while steel closer to the cabin is more resilient. This structure helps absorb the impact of a collision before it reaches the occupants. The compact power train is designed to help optimise deformation. The unique geometry of the frontal structure and longitudinal steel struts in the doors help disperse crash energy away from the front to the rear of the car, further helping to reduce the strain on the occupants. A steel strut under the dashboard helps prevent components in the engine bay from intruding into the cabin. This also helps protect legs and feet.

Side Impact Protection System (SIPS)
SIPS is a Volvo unique safety system that has been developed to help protect where occupants are most exposed to the crash forces. The steel framework of the car – including the front seats – is designed and reinforced to help displace the impact of a side-collision away from the occupants to other parts of the car body and help prevent intrusion into the cabin. The side structure is extremely strong to help withstand a severe side impact – even with a larger vehicle. The Inflatable Curtain (IC) for all the outboard occupants and the front seat side airbags interact to help provide further protection.

Restraint technologies

Inflatable Curtain (IC)

Whiplash Protection System (WHIPS)

Power retractable door mirrors with ground lighting

Power front seats

SAFETY

SAFETY Protective

Restraint technologies
In a collision, Volvo's restraint technologies interact to help reduce the impact. The **safety belts with pre-tensioners** activate within a few thousandths of a second in the event of a collision and tighten the belt to help keep the occupants securely restrained. The front seat safety belts then release a little so that the driver and passenger are cushioned by the airbags in a controlled manner. Helping to optimise protection, the **dual-stage airbags** adapt the level of inflation depending on the force of the collision. The driver's airbag also interacts with the deformation of the collapsible steering column.
Side airbags in the front seats help reduce the risk of serious injuries in a side collision. The **Inflatable Curtain (IC)** helps protect the heads of both front and rear outboard occupants. It also stays inflated for some seconds to provide prolonged protection for subsequent impacts.

Whiplash Protection System (WHIPS)
Integrated in the front seats, Volvo's WHIPS cradles the occupant to help reduce the risk of whiplash injury (one of the most common types of traffic injury and often the result of a low-speed rear impact collision). The function is activated by a collision of sufficient force from behind. Independent research has shown that WHIPS is one of the most effective systems in the world and can reduce the risk of long-term invalidity by 50%.

SAFETY Security

Approach and Home Safe Lighting
Activated with the remote control, Approach Lighting provides a warm reception on a dark night. This consists of interior and side lights – ground lighting too, if you choose it. Home Safe Lighting is activated with the headlight stalk as you leave the car and it provides a similar courtesy when exiting your car. This feature includes a dipped beam from the headlight to accompany you to your door.

Power retractable door mirrors with ground lighting*
At the touch of a button, these door mirrors can be folded flat against the car where they are less likely to get damaged after you've parked. They also fold or unfold automatically every time you lock or unlock the car. The integrated ground lighting is activated with the remote control. Beyond enhancing security to and from your car at night, this is also convenient when getting in and out.

* Included with the optional Blind Spot Information System (BLIS)

COMFORT

COMFORT Seats

Power front seats*
Find your perfect driving position with push-button ease. The driver's seat also incorporates a memory function that stores three separate seat settings connected to a specific remote control – a feature that's appreciated when the car has several drivers.

* Included in the optional Premier Plus and Platinum trim level

Power glass moonroof

Front center armrest

Sun glass holder

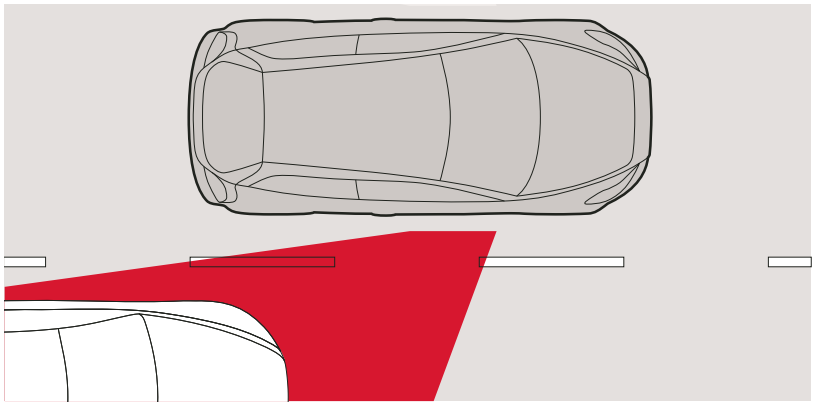

Blind Spot Information System (BLIS)

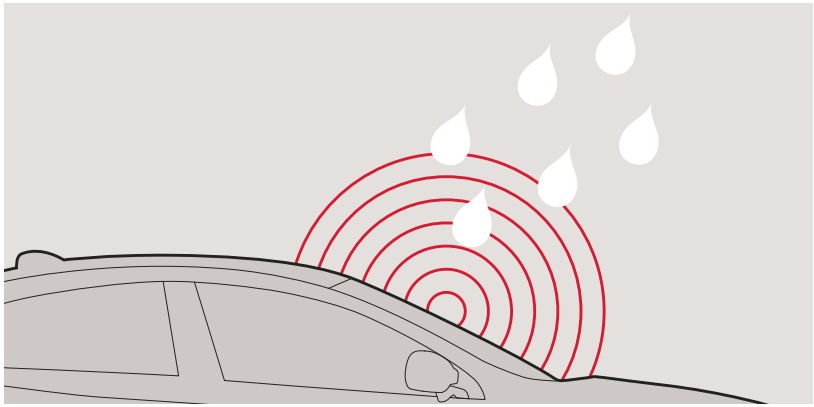

Rain sensor

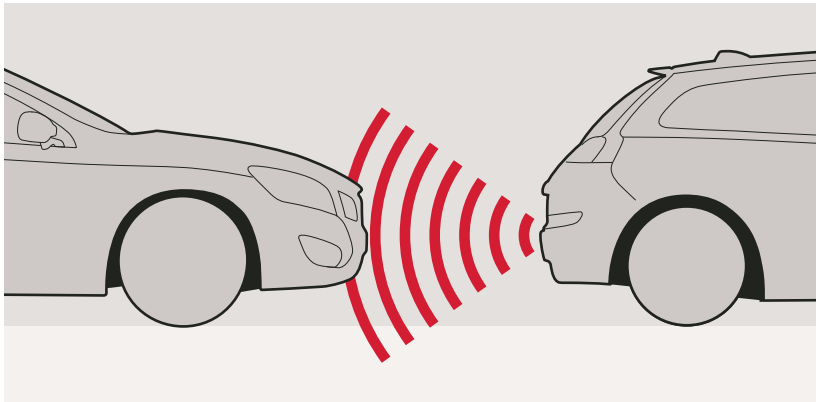

Park assist

COMFORT

COMFORT Climate

Power glass moonroof*
This makes the interior feel extra light and airy. It opens and closes at the touch of a button. If the sun is too strong, just close the built-in sun screen. The moonroof can also be closed together with the side windows using the central locking remote control.

* Included in the Premier Plus and Platinum trim level

Electronic Climate Control (ECC)*
ECC ensures you and your passengers always enjoy a pleasant in-car climate. It maintains the set temperature inside the car however much the temperature outside changes, or the sun shines in. The driver and front-seat passenger can set the temperature individually for each side.

* Included in the optional Climate Package

Interior Air Quality System (IAQS)*
Volvo's IAQS continuously monitors incoming air and will, if necessary, temporarily close external air vents to shut out carbon monoxide, ground-level ozone and nitrogen dioxide. Meanwhile, an active carbon filter protects the occupants from other harmful gases and unpleasant odours. This helps to ensure that the air you breathe in the car is cleaner than that outside when driving in heavy city traffic and tunnels.

* Included in the optional Climate Package

COMFORT Storage

Front center armrest
The multifunctional front center armrest takes care of CDs, coins, mobile phones, MP3 players and other vital goodies. Under the armrest you'll also find an AUX input and a USB port to connect your MP3 player to the car's audio system. In the tunnel console between the seats, integrated cupholders are hidden under an elegant roll-top cover.

Sun glass holder*
This elegant holder keeps glasses or sun glasses conveniently at hand. It accommodates most sizes and mounts above the door window.

* Retailer Installed Accessory

TECH & SOUND

TECH & SOUND Driver's Support

Blind Spot Information System (BLIS)*
BLIS is designed to help the driver keep a lookout on either side of the car. As a vehicle enters your blind spot, this function can alert you with an indicator light built in to the front door pillar – left or right. Together with the door mirrors, BLIS helps you assess the feasibility of a lane change. BLIS is activated once the car exceeds 6 mph, and reacts to almost any type of vehicle from a motorcycle upwards, day or night. BLIS includes power retractable side view mirrors.

* Optional

Rain sensor*
Once activated, the rain sensor can start the windscreen wipers as soon as it begins to rain or if water splashes onto the windscreen. For your convenience, it can also automatically adapt the intermittent windscreen-wiper function. Its sensitivity can be adjusted via a ring on the wiper stalk.

* Included in the optional Climate Package

Park assist*
Activated when you engage reverse gear, rear park assist helps you when reversing into tight spaces. The audio system is turned down and a pulsating sound from the rear loudspeakers becomes a continuous tone as you approach an obstacle. Front park assist performs a similar function at the front of the vehicle – alerting you via the front loudspeakers.

* Retailer installed Accessory

Keyless drive*
Keep the car key in your pocket or handbag. Using the keyless drive technology you can unlock the doors and drive away without using the car key. To start the engine, just turn the starter control in the instrument panel.

*Optional

Personal settings
Define your Volvo's convenience and security settings according to your personal preferences using this simple computer interface. Depending on which technologies you have, this is where you configure the audio and climate settings, door mirrors, navigation, communication, central locking, Approach and Home Safe lighting and the Intelligent Driver Information System.

Trip computer
Monitor the current and average fuel consumption, driving range on current fuel reserves and average speed. Menu selection and resetting computer settings controlled by using the turn indicator stalk.

Cruise control
For a relaxing journey, cruise control automatically maintains your chosen speed. It is conveniently operated by controls on the steering wheel.

Integrated Bluetooth® handsfree system

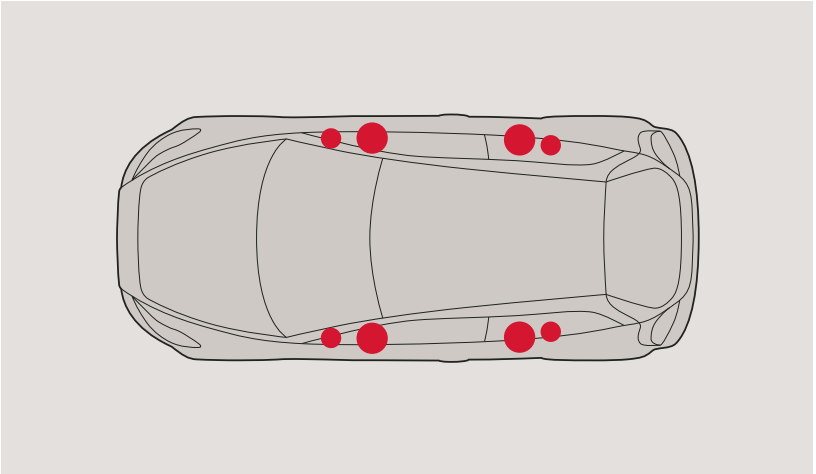

High Performance audio system

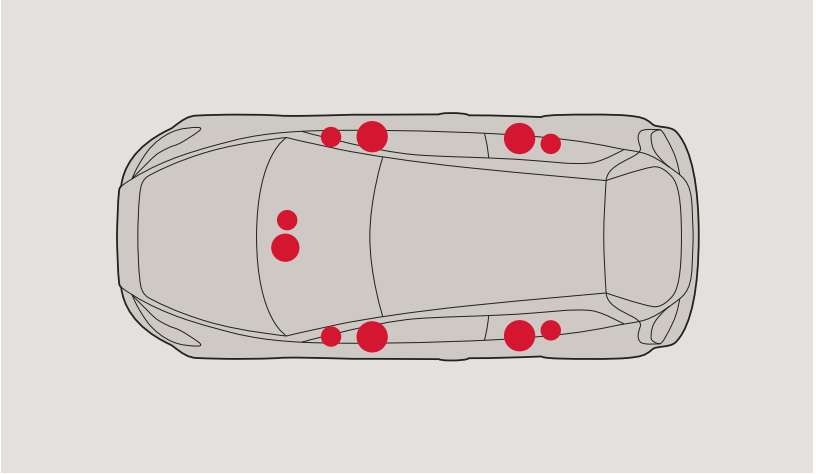

Premium Sound audio system

Portable Navigation System

SiriusXM Satellite Radio

TECH & SOUND

TECH & SOUND Communication

Integrated Bluetooth® handsfree system with streaming audio
Bluetooth® technology enables a mobile phone to be connected to the infotainment system in your Volvo, wirelessly. Once configured for a mobile phone, the system automatically recognizes your phone as you enter the car. And as you climb in and out of the car, the system automatically allows you to switch freely from the phone to the handsfree system and back again. With Volvo's integrated Bluetooth® handsfree system you conveniently operate your phone using the buttons in the steering wheel or the center console keypad. Available as an accessory, there's also a voice-controlled Bluetooth® handsfree system that will listen to your command and make calls for you.

® The Bluetooth word mark and logos are owned by the Bluetooth SIG, Inc. and any use of such marks by Volvo Car Corporation is under license. Other trademarks and trade names are those of their respective owners.

Portable Navigation System
Navigate with style and sense using this ultra-thin Garmin navigation unit. Just fit it into the docking station at the base of the windshield pillar. It offers voice recognition control and touch screen technology for ease of operation. Using Traffic Message Channel radio data technology the system will show traffic problems on your route and can provide alternative routes. Retailer installed accessory

Navigation System with RTT (Real Time Traffic)*
Navigation System with real-time traffic, remote control and map care with two complimentary updates. Guides you anywhere with precise audio and visual directions. Using the global positioning satellite system, a liquid crystal 6.5-inch display shows your location on a map and plots the best route to your destination. Via TMC (Traffic Message Channel) radio data broadcasts VNS also lets you know if there's traffic or weather-related trouble on route and recommends an alternative. Controls are conveniently located on the steering wheel. All map-based information is stored on DVD discs. Volvo's Navigation System includes Map Care which provides two map data updates at no charge.

* Included in the Platinum trim level

Maps do not cover all areas or all routes within an area. Also constant expansion and rebuilding of the road network mean that the digital map database is not always the latest road information. Always follow relevant regulations and road information.

TECH & SOUND Audio/Entertainment

Premium Sound audio system*
Our top-of-the line audio system designed for perfect sound dynamics, featuring ten loudspeakers. With Dolby® Pro Logic® II surround sound for an authentic audio experience in all seats. Premium Sound equipment includes:

- MP3 and WMA compatible in-dash CD player
- 650 W digital class D amplifier
- Dolby® Pro Logic® II surround sound with center loudspeaker and digital sound processor
- 10 high-end loudspeakers

Dolby, Pro Logic, and the double-D symbol are registered trademarks of Dolby Laboratories.

* Included in the Platinum trim level

High Performance audio system
A powerfully versatile system. Each loudspeaker is fitted with a powerful magnet and a large coil. In combination with the amplifier, this system promotes excellent transient reproduction and high power – quite simply superb sound. High Performance equipment includes:

- MP3 and WMA compatible in-dash CD player
- 4x40 W High Performance amplifier
- 8 High Performance loudspeakers

Premium loudspeakers
The ten high-end loudspeakers in the Premium Sound system are powered by a 650 W digital amplifier. There are three separate speakers – woofer, tweeter and midrange – in each front door and in the rear doors there is a similar set-up with tweeter and woofer/midrange. Each speaker has a crossover filter to maximize fidelity. The latest generation Dolby® surround system with a center loudspeaker and sound processor recreates authentic sound with a strong sense of presence for everyone in the car – a Volvo world first. The digital class D amplifier features new technology to provide extremely high efficiency, enabling it to generate the most audio power from the least amount of current.

SiriusXM Satellite Radio
Imagine driving along hearing the music you want, without having to flip through commercials, fumble with CDs or manage a playlist. Imagine hearing play-by-play action of your favorite team, no matter where you are. Or having channels and channels of comedy, talk, news, entertainment, family programming and more. Now Imagine having all of this, coast-to-coast, wherever you drive. This is the world of SiriusXM. Each Volvo equipped with Satellite radio includes a 6-month trial subscription to the "Sirius Select" package.

SiriusXM SATELLITE RADIO

Roof cargo carrying system

Luggage Compartment Cover

Net pocket and load-securing net

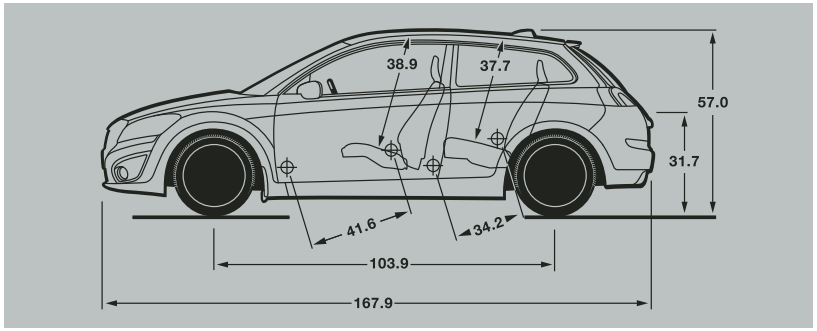

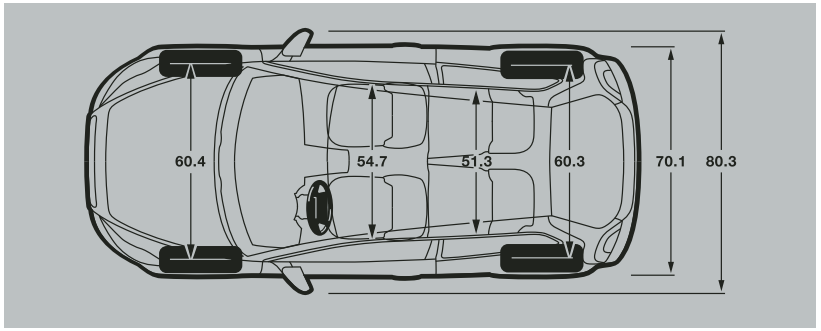

PACK & LOAD

PACK & LOAD Carrying/Towing

Roof cargo carrying system*
To help you fully utilize the roof of your Volvo, we've developed a range of versatile cargo carrying accessories. This system is dimensioned to carry up to 165 lbs. The factory-fitted attachment points in the car's roof make the load carriers easy to fit, and even quicker if your car has roof rails. Various load accessories – such as roof boxes and different holders for bikes, skis, surfboards and kayaks – can be attached to the cargo carriers to meet your needs. These accessories can be freely combined for flexibility and many are aerodynamically designed to help reduce fuel consumption and wind noise. And most of them can be locked with the same key, using Volvo's One-Key System.

*Retailer installed accessory

Luggage Compartment Cover*
The luggage compartment cover helps conceal bags and other objects in the luggage compartment. It features soft lines and is color coordinated to match the interior of the car.

*Retailer installed accessory

Net pocket and load-securing net*
The load-securing net helps keep luggage and loose items from shifting on the cargo compartment floor, as does the practical net pocket storage for small items along the left side of the load compartment.

*Retailer installed accessory

PERFORMANCE

PERFORMANCE Chassis/Steering

Driveline
Front wheel drive. Transverse engine. Six-speed manual transmission. It is also available with a five-speed Geartronic automatic allowing manual shifting. The smooth manual six-speed transmission inspires an active driving style, while the smooth clutch operation affords confident take-off. For the best of both worlds, there's the option of Geartronic – a responsive five-speed automatic for relaxed driving. It can also be shifted manually so that you can maintain a lower gear to bring up the revs or provide the added assistance of engine braking.

Chassis
Front suspension with spring struts (McPherson), anti-dive and anti-lift function. Multilink independent rear suspension. Stabilizer bars front and rear. R-DESIGN offers a sport tuned dynamic chassis that includes stiffer spring rates and dampers with a quicker steering ratio, for spirited driving. Dynamic Stability system can help counteract a skid. The rigid body enables the suspension to perform optimally – for well-balanced handling and a high level of comfort. The front and rear suspensions also interact to provide stable braking and smooth steering. The DSTC system assists if either of the drive wheels begins to lose traction, and adds the benefit of counteracting if a skid is imminent

Steering
Power-assisted electro-hydraulic rack and pinion steering. Tilt and telescopic steering wheel column. 2.6–2.9 turns lock to lock (depending on wheel size). Turning circle 38.1 ft, depending on wheel size. Behind the wheel, you can enjoy responsive yet firm steering at all speeds. High steering precision and balanced road feedback are easily enjoyed benefits.

Brakes
Power-assisted anti-lock disc brakes (ABS), ventilated discs front. EBA (Emergency Brake Assistance). EBD (Electronic Brake Distribution) between the front and rear brakes. Diagonal-split braking system. Powerful anti-lock disc brakes help ensure a short stopping distance under all circumstances and withstand tough use without fading. EBA helps you use your brakes to the full in an emergency situation, while EBD distributes the braking effect between the front and rear wheels in order to achieve optimal results according to the car's load and driving conditions.

PERFORMANCE Transmission

Five-cylinder in-line engine.
Double overhead camshafts and 20 valves. The five-cylinder engine features continuously variable valve timing on both the inlet and exhaust side. Electronic engine management system. Three-way catalytic converter with heated oxygen sensor. A turbocharger and dual-charge air coolers (Intercoolers). Boasting variable all-valve timing, this high-performance power source delivers an exceptionally quick and powerful response throughout the entire range of rpm. It complies with stringent emission standards, such as California's ULEV II.

PERFORMANCE Engines

Volvo C30 T5 (227 hp)
Engine type: 2.5-liter five-cylinder turbocharged engine
Max. power output: 227 hp at 5000 rpm
Max. torque: 236 lbs./ft. at 1500–5000 rpm
Acceleration 0–60 mph: 6.2 sec
Top speed: 146 mph
Fuel consumption city, man/auto: 21/21
Fuel consumption highway, man/auto 29/30
Environmental classification: ULEV 2
Transmission: Six-speed manual or five-speed Geartronic automatic
Fuel tank: 15.9 US gallons

TAKING CARE OF YOUR OWNERSHIP NEEDS.

VOLVO LEASING AND FINANCING OFFERS.

Special offers are available to finance your new Volvo product through our preferred provider, US Bank. Whether you are looking for the convenience of a lease or the pride of owning your Volvo vehicle, our nationwide network of retailers and authorized financial service providers are ready to assist you with all your financing needs. Please contact your local retailer for details .

On Call roadside assistance.

Whenever you need us, we're just a phone call away. Our nationwide network of retailers and authorized service providers are ready to assist. Whether you require roadside assistance or maps and routing information for your next trip, refer to your On Call Card and dial 1-800-63-VOLVO – anytime, day or night. Your complimentary four-year membership activates the moment you become a Volvo owner.

Volvo new car warranty.

Your new car warranty provides comprehensive coverage for four years or 50,000 miles, whichever occurs first. Additional warranties cover corrosion, seat belts, the supplemental restraint system, emission systems, genuine Volvo replacement parts and genuine Volvo accessories. Should you encounter any problem with your Volvo, simply contact the nearest retailer for assistance. Where your warranty ends, Volvo Increased Protection (VIP) plans begin. To purchase the additional protection of a VIP plan, contact your local retailer.

Complimentary Factory Scheduled Maintenance.

Volvo is committed to a premium ownership experience for its customers. To further enhance your ownership experience, all 2012 model year Volvo's sold in the United States will include Complimentary Factory Scheduled Maintenance. This program provides scheduled maintenance coverage for the first 3 years or 36,000 miles, is designed to compliment your Volvo warranty, and will help ensure trouble free operation of your Volvo. Coverage includes factory recommended maintenance including oil and filter changes, checks and adjustments as listed in your Warranty and Maintenance Records Information booklet, for the first four maintenance services at intervals of 7,500, 15,000, 22,500 and 30,000 miles.

Service must be performed within 1,500 miles before or after each scheduled interval. Coverage is limited to scheduled maintenance items listed in the 2012 model year Warranty and Maintenance Records Information booklet. Normal wear items such as brake pads and wiper blades are not covered under the Complimentary Factory Scheduled Maintenance. An authorized retailer must perform maintenance. Offer is transferable. Optional Factory Scheduled Maintenance program upgrades are also available that will allow you to customize coverage to meet your driving needs. See your Volvo retailer for details.

Volvo service for life.
Taking the concept of service to a new level.

- Two-year Parts Warranty. Including the labor when they're installed at an authorized Volvo retailer
- Complimentary Software Updates during a scheduled maintenance visit. New software required as part of repair or accessory installation is not included
- Complimentary Vehicle Diagnostics if your Volvo has a "check engine" lamp or other warning indicator illuminated. Up to an hour of computer diagnostics
- Special discounted On Call Advantage Roadside Assistance pricing. Visit your retailer for enrollment form

Volvo mobility program.

The goal of the Volvo Mobility Program is to assist persons with physical disabilities or hearing impairment. For those with exceptional transportation needs, this can be facilitated within the extraordinary comfort and safety of a specially adapted Volvo. For additional information on this program, please contact the Volvo Mobility Program Headquarters at (800) 803-5222 or visit **www.volvocars.us/mobility**. TTY users are invited to call 1-800-833-0312.

Personal shopper.

The Volvo Personal Shopper is dedicated to providing you with a whole new level of shopping convenience. Whether you'd like help identifying the Volvo model that best fits your lifestyle, detailed information on any Volvo model, or a comparison against the competition, Volvo is there to help. We can arrange a Guest Drive for you at your nearest Volvo Retailer. So make the most of your shopping time and call the Volvo Personal Shopper at 1-800-550-5658. (U.S. only)

VOLVO OVERSEAS DELIVERY.

Volvo Overseas Delivery offers a unique way to buy your new custom-built car as well as a unique way to see more of Europe. And when you're done traveling, bring the pleasure of driving a Volvo back home. Purchase any new Volvo as part of the Volvo Overseas Delivery Program and enjoy all this – and more:

- Attractive pricing on US models.
- Access to colors and certain features normally only available in Europe.
- 15 days of international insurance and export registration included.
- Two complimentary round-trip tickets with Scandinavian Airlines.
- One free hotel night in Gothenburg, Sweden, the home of Volvo.
- An exciting Volvo Factory Tour or a visit to the new Volvo Brand Experience Center.
- An exclusive VIP delivery experience at the Volvo Factory Delivery Center.
- The opportunity to explore Europe in the comfort and safety of your own Volvo, either with one of our spectacular tours or on your own.
- Extensive complimentary home shipment services. Just leave your car with us. We'll ship it to you the convenient way while you relax and enjoy your complimentary flight back home.

Can you think of a better way of traveling overseas and making your souvenir part of an unforgettable experience? If you would like to know more, contact your local Volvo retailer, our Customer Care Center (800) 631-1667, or visit **www.volvocars.us/mybagsarepacked**
www.facebook.com/volvooverseasdelivery

VOLVO CARS MILITARY/DIPLOMAT/ EXPATRIATE SALES. FOR YOU LIVING ABROAD.

Sometimes life abroad offers exceptional benefits. Such as buying a new tailor-made Volvo on very special and rewarding terms. Whether you are traveling for pleasure or are in a professional, diplomatic or military post outside your home country, turn to Volvo for a great deal. For US Military personnel posted overseas our authorized military agents outside the US offer:

- Great savings compared with Stateside pricing.
- Professional assistance with all legal formalities and paperwork.
- Four-year warranty coverage also outside the US (US and Canadian specifications)
- US specifications – built to meet legal requirements in all US states.
- No US import duty with PCS orders, for US military personnel taking delivery overseas.
- Included shipping & Marine Insurance, delivery to an authorized Volvo retailer of your choice in the USA. US diplomats & military personnel stationed abroad for more than 140 days & non-US diplomats (depending on status) are normally exempted from customs import duty.
- Delivery to a Volvo military agent close to your base or assignment overseas.
- Five years valid Volvo Home Shipment from authorized drop-off points in Europe to an authorized US Volvo retailer of your choice included.
- More than 20 drop-off points in Europe.
- The option of VIP factory delivery in Sweden or delivery to selected major cities in Europe.
- The option of our special Cruise & Collect package with Stena Line ferries (German market).
- The benefit of the Volvo Assistance Europe scheme at no extra cost.

Taking advantage of the savings, benefits and convenience of Volvo's international programs is easy. Volvo Cars Military Sales, Volvo Cars Diplomat Sales and Volvo Cars Expatriate Sales are professional and global organizations with one goal – to make it advantageous and convenient for you to buy your new car when living abroad. **www.military.volvocars.com**
www.diplomat.volvocars.com

For Military/Diplomat/Expatriate sales while in the US, contact your local Volvo retailer, our Customer Care Center (800) 631-1667 or visit **www.volvocars.us/mybagsarepacked**

WELCOME TO THE CLUB.

THE VOLVO C30 MERCHANDISE COLLECTION.

This smart collection of lifestyle accessories captures the driving spirit of your new Volvo and reflects the best of modern Scandinavian design. The signature items below are a select few. Find more keepsakes, gifts and apparel at your local Volvo showroom and at **www.volvocars.us**

Silver diamond tumbler

Fossil grey dial watch

Vintage crew sweatshirt

Portable speaker case

Barriga dome keyring

Workzone lunch cooler

Black barrel ceramic mug

Organic black T-shirt

DESIGN THE VOLVO THAT'S REALLY YOU. EXPERIENCE IT INSIDE AND OUT. LEARN ABOUT THE DETAILS, TECHNICAL FEATURES AND ACCESSORIES. SEE FILMS ABOUT YOUR FAVORITE VOLVO AND ITS INNOVATIONS. COMPARE DIFFERENT VOLVO MODELS AND ENGINE ALTERNATIVES. JOIN THE VOLVO COMMUNITY AND SHARE GREAT CAR STORIES FROM ALL OVER THE WORLD. **FIND YOURSELF AT WWW.VOLVOCARS.US**

www.twitter.com/VolvoCars_US www.facebook.com/VolvoCarsUS www.youtube.com/VolvoCarsUS

Specifications, features, and equipment shown in this catalog are based upon the latest information available at the time of publication. Volvo Cars of North America, LLC reserves the right to make changes at any time, without notice, to colors, specifications, accessories, materials, and models. For additional information, please contact your authorized Volvo retailer. © 2011 Volvo Cars of North America, LLC. Printed in USA on 100% recyclable paper. **MY12E**

FSC
www.fsc.org
MIX
Paper from responsible sources
FSC® C103044

VOLVO
Volvo Car Corporation

www.volvocars.us

Volvo. for life